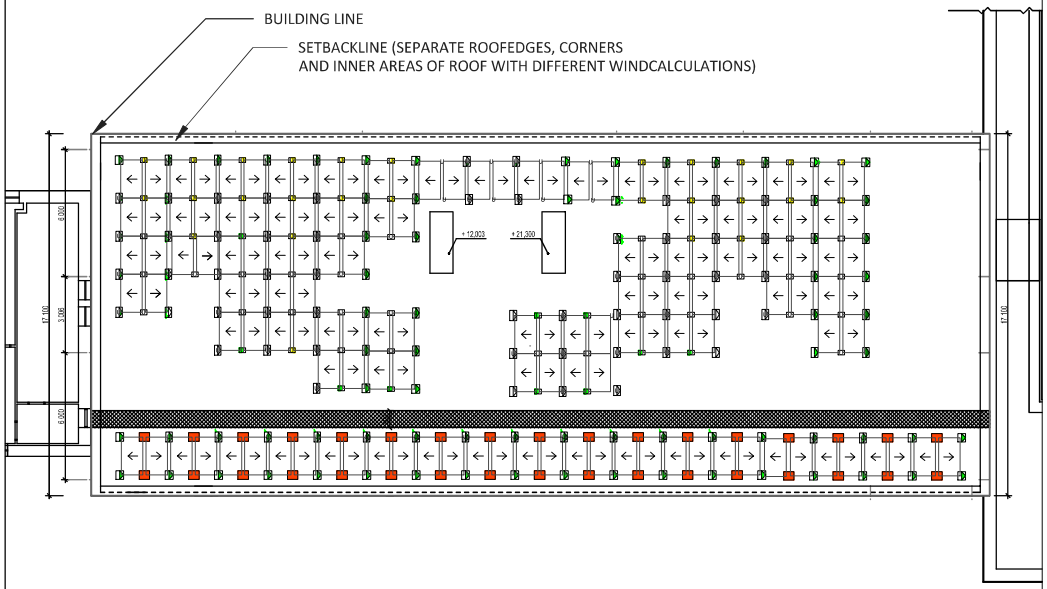

ARRAY SITE MAP

GENERAL NOTES:

1. ALL SITE, PROJECT, AND BUILDING DETAILS ARE PROVIDED BY CUSTOMER OR GENERATED VIA SATELLITE IMAGERY FROM INFORMATION PROVIDED BY CUSTOMER. PANELCLAW IS NOT RESPONSIBLE FOR SITE INACCURACIES THAT COULD LEAD TO CHANGES TO THESE DRAWING DETAILS AND ARRAY LAYOUT CONFIGURATIONS. ALL INFORMATION CONTAINED WITHIN THESE DOCUMENTS ARE TO BE FIELD VERIFIED BY CUSTOMER AND INSTALLER. ANY CHANGES OR MODIFICATIONS TO THESE DOCUMENTS, CONTAINED INFORMATION, OR FINAL ARRAY AND MOUNTING SYSTEM INSTALLATIONS MUST BE SUBMITTED TO PANELCLAW AND OTHER PROJECT AUTHORITIES FOR APPROVAL.
2. REFER TO AND FOLLOW THE APPROPRIATE PANELCLAW INSTALLATION MANUALS AND PROCEDURES DURING THE INSTALLATION PROCESS. NOT FOLLOWING SUCH PROCEDURES AND METHODS COULD RESULT IN DAMAGE TO THE COMPONENTS OR MAY VOID THE PRODUCT WARRANTY.
3. REFER TO THE SPECIFIC ARRAY BALLAST SHEETS FOR BALLASTING REQUIREMENTS BASED ON THE PROVIDED SITE INFORMATION.
4. THE MODULE FOOTPRINT DETAIL INCLUDES THE ASSEMBLY OF (1) MODULE MOUNTED TO (4) SUPPORTS AND (1) DEFLECTOR. DIMENSIONS REFLECT THE CRITICAL MEASUREMENTS OF A MODULE-MOUNTING SYSTEM ASSEMBLY. DIMENSIONS DO NOT REFLECT DIRECT MODULE LENGTH AND WIDTH.
5. COEFFICIENT OF FRICTION ASSUMED TO BE 0,5 VERIFY ON ROOF
6. NOT FOR CONSTRUCTION. FOR PLANNING PURPOSES ONLY. ALL DIMENSIONS HAS TO BE PROOVED BY CUSTOMER/ INSTALLER ON THE ROOF.
7. DEFLECTED MODULES HAS TO BE CONNECTED TO POLAR BEAR N/S SUPPORTS
8. WHEN INSTALLING, GRAVEL, STONES, ETC. MUST BE CLEARED, SUPPORTS FEET LAID DOWN AND THEN COVERED OVER.

SHORT SPACING

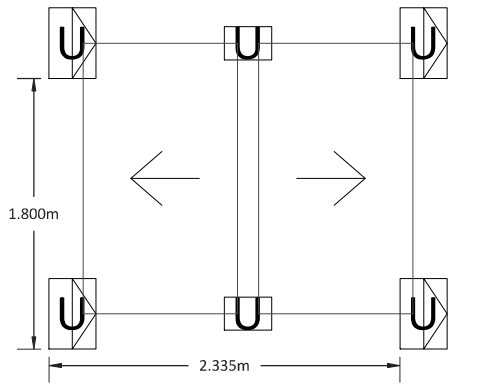

EAST WEST UNIT FOOTPRINT

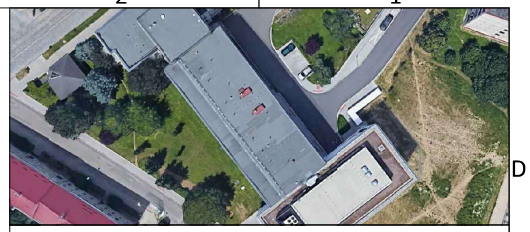

AERIAL PHOTO / SITE DIAGRAM

POLAR BEAR EAST WEST

PROJECT DETAIL

WIND ZONE	22,5m/s
TERRAIN CATEGORY	III
MODULE TYPE	HUASUN Himalaya M6 Black
MODULE DIMENSIONS (mm x mm)	1038 x 1755
NUMBER OF MODULES	158
MODULE WATTAGE (W STC)	400
SYSTEM SIZE (KW STC)	63,2
SYSTEM WEIGHT (KG)	7692,93
SYSTEM AREA (SQ M.)	365,82
ARRAY TILT (DEG)	9,3
N-S SPACING (A) (mm)	1800
E-W SPACING (F) (mm)	1008

PROJECT PART QUANTITIES

ITEM	PART NUMBER	QTY
CLAW	500000701/703	632
EXTENDED E/W HIGH SUPPORT	5010072	0
Polar Bear N/S Deflector Support G90 AK (PVC)		
EXTENDED E/W LOW SUPPORT	5010137	0
Polar Bear Low Support G90 extended AK (PVC)		
E/W HIGH SUPPORT	7010072EW	26
Polar Bear E/W Support G90 high AK (PVC)		
E/W LOW SUPPORT	6010072EW	26
Polar Bear E/W Support G90 low AK (PVC)		
UNIVERSAL HIGH SUPPORT	9010072	79
PolarBear E/W Universal Support G90 high PVC(AK)		
UNIVERSAL LOW SUPPORT	8010072	95
DEFLECTOR	0	0
0		
END PLATE	2000140	0
TOTAL STONES	3,3kg	988

REV	DESCRIPTION	PREP	CHECK	DATE
1	BALLASTED LAYOUT	GB	GB	25.10.2022

AZIMUTH

XXX°
N

panel claw®

ESSENTIALS GMBH & CO KG
GRAFENBERGER ALLEE 190
D-40237 DÜSSELDORF
TEL: +49 211 930 70 400
FAX: +49 211 930 70 402
www.panelclaw.de

PREPARED FOR

PROJECT
SUNFIX10128-ow-FV Olomouc_budova P

LOCATION
779 00 Olomouc, Czechia

SCALE - | REV | SIZE A4 | SHEET

© PANELCLAW, INC
ALL INFORMATION CONTAINED WITH THIS DOCUMENT IS PROPERTY OF PANELCLAW, INC. THE PURPOSE OF THIS DOCUMENT IS TO FACILITATE THE INSTALLATION OF PANELCLAW SOLAR PHOTOVOLTAIC MOUNTING SYSTEMS. DO NOT COPY OR DISTRIBUTE WITHOUT PERMISSION.

LEGEND: HIGH SUPPORTS

A	B	C	D	E		BALLAST LEVEL (A/B/C/D/E)
U	U	U	U	U	U-M	UNIVERSAL SUPPORT MOUNTED AS HIGH SUPPORT
					M	HIGH SUPPORT
E	E	E	E	E	E-M	EXTENDED HIGH SUPPORT
0- STONES	4- STONES	8- STONES	12- STONES	16- STONES	MECHANICAL ATTACHED	STONE QUANTITY

STONE LEGEND CAN CHANGE, DEPENDING FROM THE WINDLOAD REQUIREMENT

LEGEND: LOW SUPPORTS

A	B	C		BALLAST LEVEL (A/B/C)
U	U	U	U-M	UNIVERSAL SUPPORT MOUNTED AS LOW SUPPORT
			M	LOW SUPPORT
E	E	E	E-M	EXTENDED LOW SUPPORT
0- STONES	4- STONES	8- STONES	MECHANICAL ATTACHED	STONE QUANTITY

EXAMPLE:

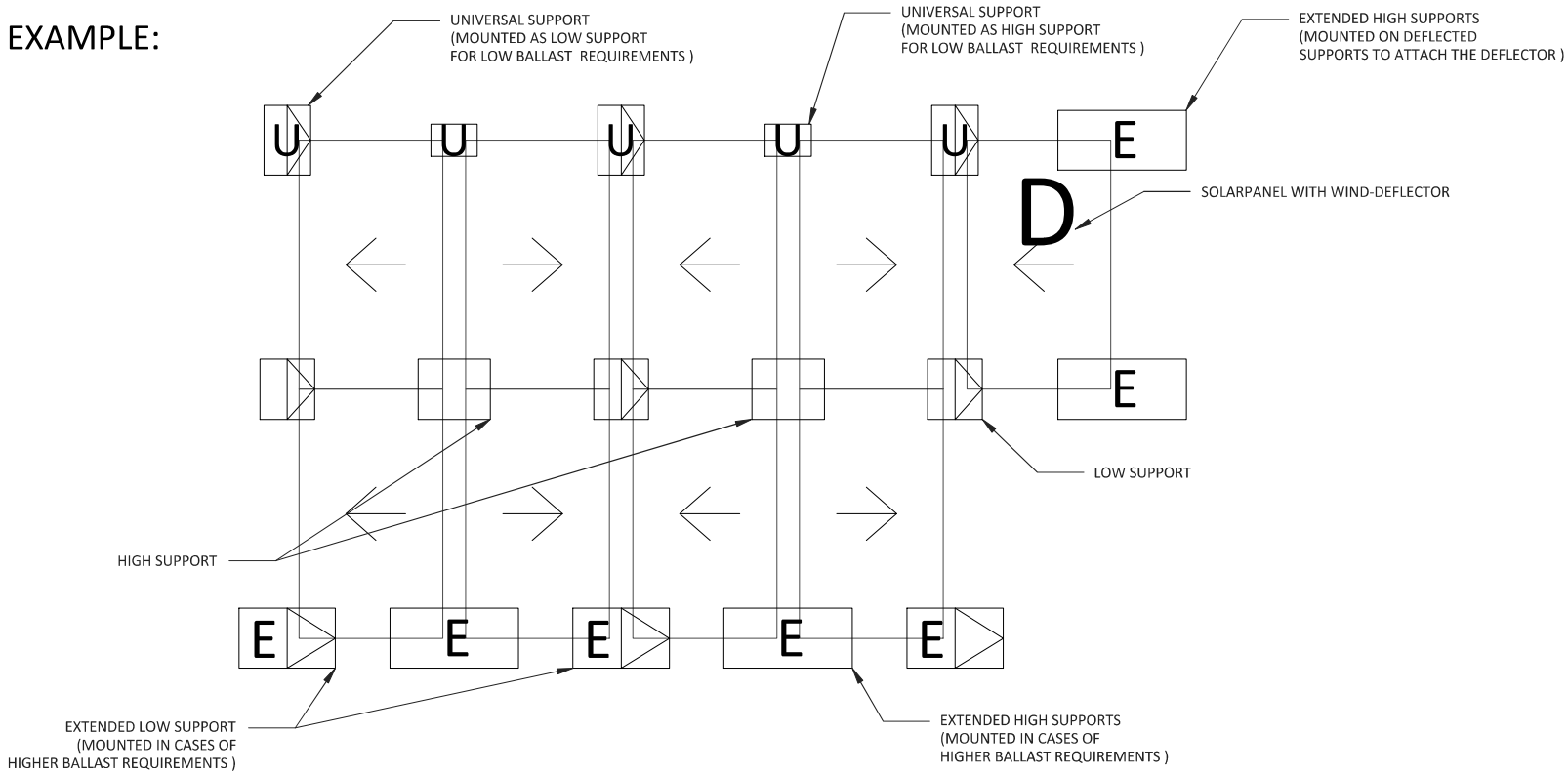

DIMENSIONS:

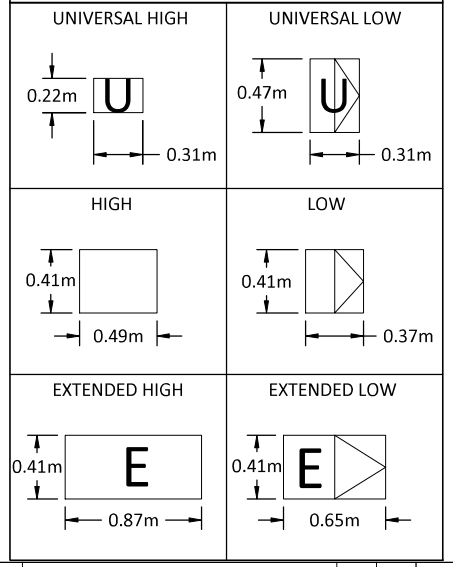

REV	DESCRIPTION	PREP	CHECK	DATE
1	BALLASTED LAYOUT	GB	GB	25.10.2022

AZIMUTH XXX° N

panelclaw®
ESSENTIALS GMBH & CO KG
GRAFENBERGER ALLEE 190
D-40237 DÜSSELDORF
TEL: +49 211 930 70 400
FAX: +49 211 930 70 402
www.panelclaw.de

PREPARED FOR

PROJECT: SUNFIX10128-ow-FV Olomouc_budova P

LOCATION: 779 00 Olomouc, Czechia

SCALE: - | REV | SIZE: A4 | SHEET

© PANELCLAW, INC
ALL INFORMATION CONTAINED WITH THIS DOCUMENT IS PROPERTY OF PANELCLAW, INC. THE PURPOSE OF THIS DOCUMENT IS TO FACILITATE THE INSTALLATION OF PANELCLAW SOLAR PHOTOVOLTAIC MOUNTING SYSTEMS. DO NOT COPY OR DISTRIBUTE WITHOUT PERMISSION.