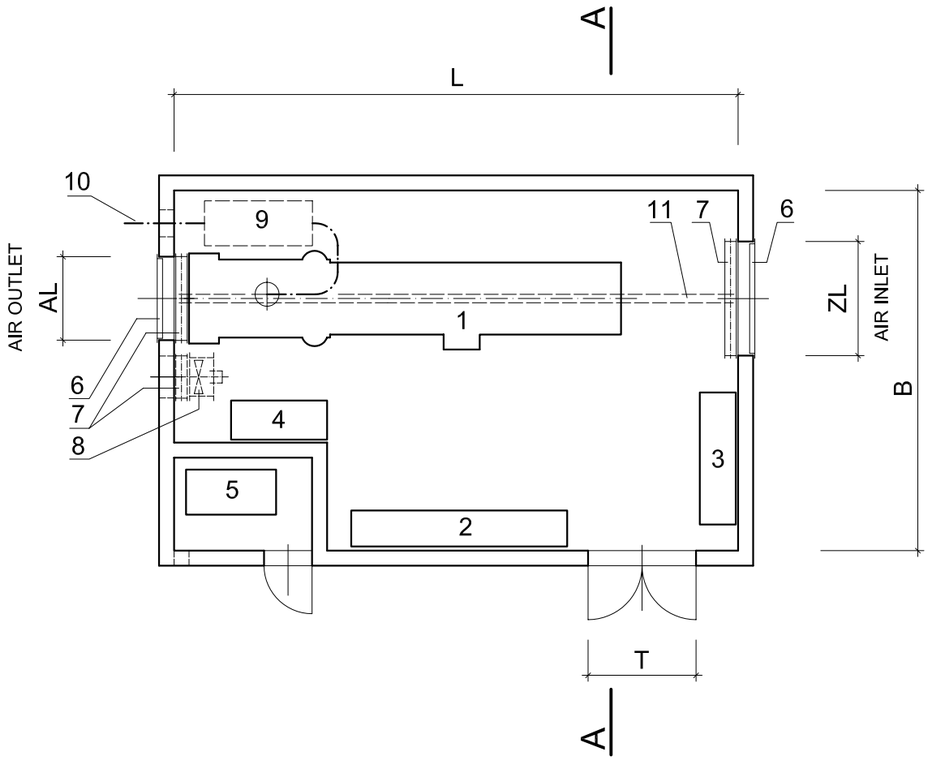

SECTION A - A

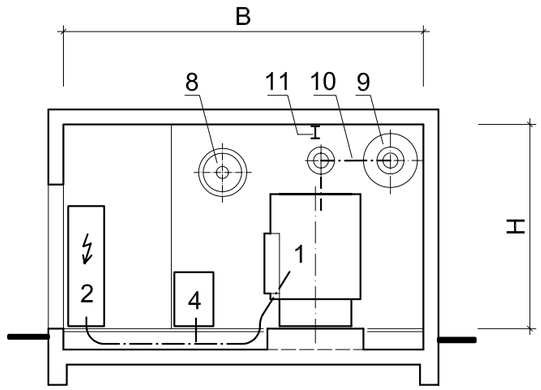

Alternative 1 : Cable installation within false floor

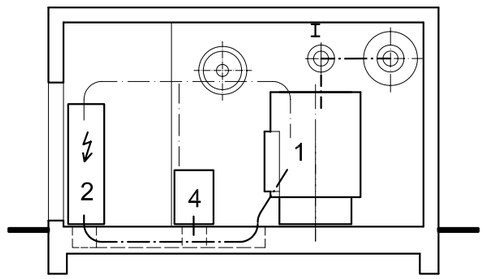

Alternative 2 : Cable installation in cable ducts or tranches

UPS - Rating		L	B	H	T	ZL	AL	Fuel tank	Sound pressure level in 10 m
475 kVA		900	560	320	150 / 220	1,5 m²	1,3 m²	1100 lit	90 dB(A)
600 kVA	Cummins	940	600	340	180 / 240	3,4 m²	2,9 m²	1400 lit	
	MTU					2,5 m²	2,0 m²		
1000 kVA	Cummins	1100	610	360	200 / 280	4,1 m²	3,5 m²	2200 lit	
	MTU					6,5 m²	3,8 m²		

All measures in CM !

DESCRIPTION

1 Diesel - UPS
2 Power panel
3 Control panel
4 Choke
5 Fuel tank (content 8 hours full load)
6 Weather protection grills
7 Electrical driven louvres
8 Air outlet fan (operation during standby mode)
9 Exhaust silencer
10 Exhaust pipe system
11 Crane rail

Version : Without Soundinsulation

General tolerance:

3,2 all sides if there is no other Information

Skale: ---

Transmission, as well as copying of these documents, utilisation and use of its content is not allowed. Any act contravening this rule can lead to sueing for demages. all rights regarding this patent issue or patented design are reserved.

	Date	Name
Drawn	07.01.02	OBERLINN.
Checked	09.01.02	HORVAT
Norm		

Title: Dynamic Diesel - UPS - System

System : NBDK - Dual output

Rating : 475 - 1000 KVA

hitzinger

Drawing No.: A.Y10000A.2403.2.0

Sheet Bl.

Zus. | Revision | Date | Name | Origin | Subst.f.: | Subst.t.: